bonprix.

931376

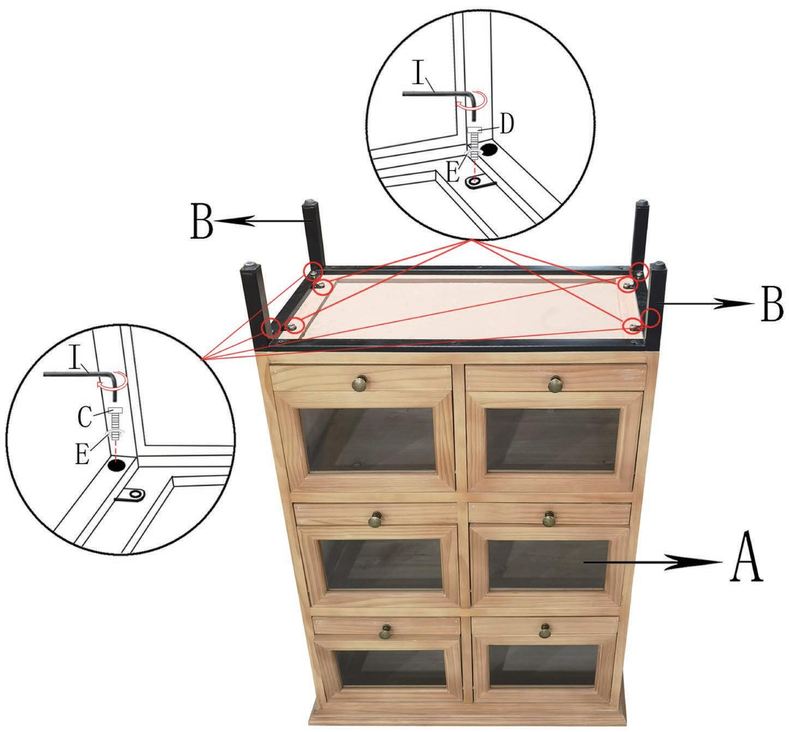

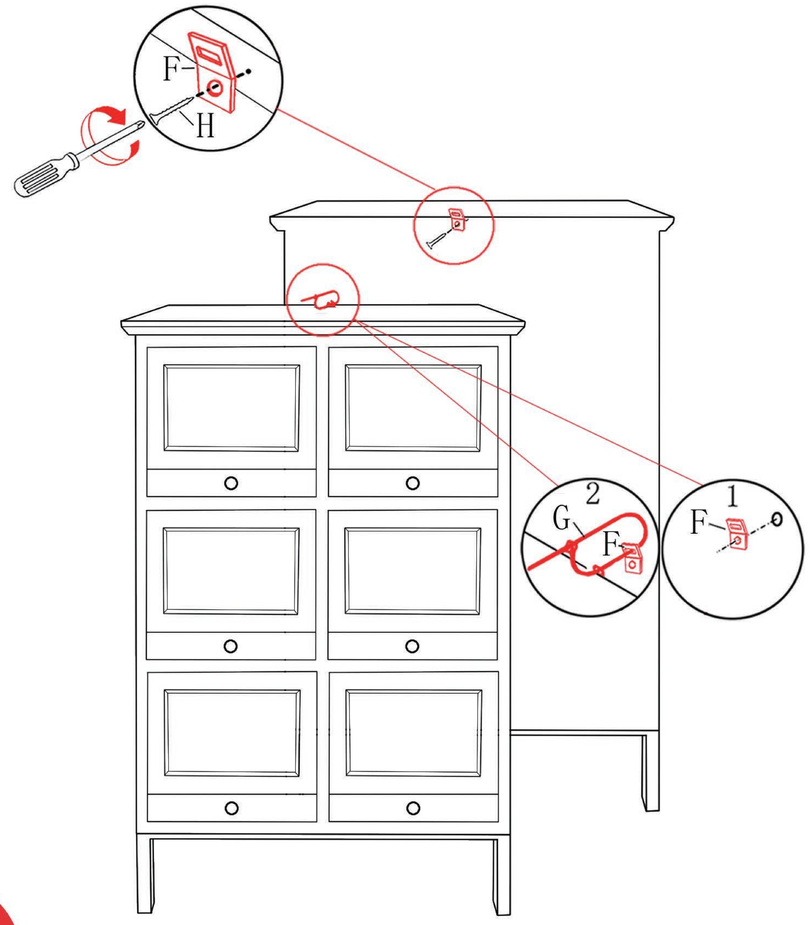

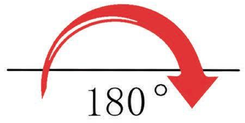

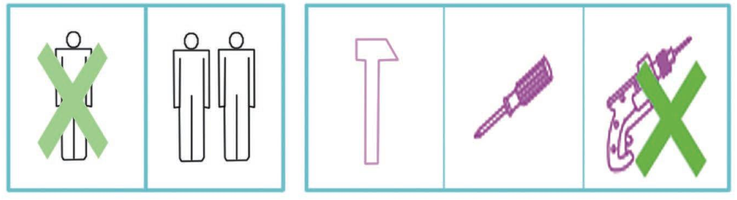

Ax1	Bx2	Cx4	Dx4	Ex8(+1)	Fx2	Gx1	Hx1	Ix1
		M8*25mm	M8*16mm					