bonprix.

908979

FSC
www.fsc.org
FSC® C153363

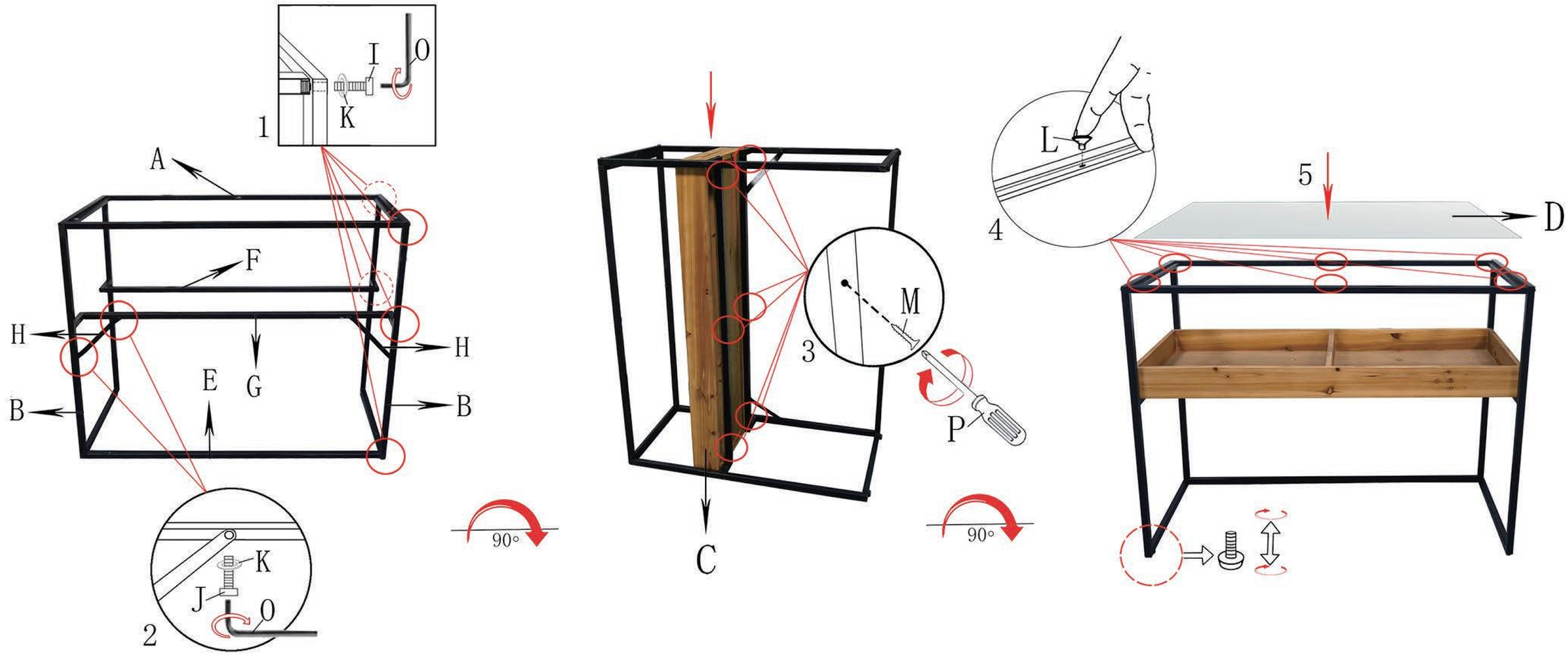

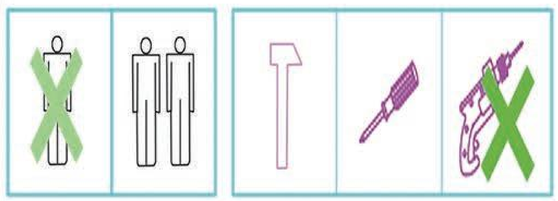

Ax1	Bx2	Cx1	Dx1	Ex1	Fx1	Gx1	Hx2	Ix10(+1)	Jx4	Kx14(+2)	Lx6(+1)	Mx6(+1)	Ox1	Px1
								M6*35mm	M6*16mm			M4*30mm		